LiGHT SKY



NEW

DOLPHIN SMART

OUTDOOR LED MOVING BEAM

FEATURES

- DOLPHIN SMART is an LED moving head light that combines a pure beam with a gobo effect
- High-precision optical lenses with oil-mist prevention design
- 174mm output lens diameter for stable and high-efficiency illumination
- 360° infinite Tilt axis rotation for flexible positioning
- CMY color mixing system + 14-slot color wheel for rich chromatic options
- 1 rotating and 1fixed gobo wheel (7 rotating + 7 static gobo slices)
- Overlapping 8-facet/24-facet prisms with frost and dynamic layering effects
- Rapid effect switching for immersive visual spectacles
- IP66-rated housing for outdoor concerts, rental events, and theme park shows
- Tool-free quick installation and DMX512, RDM control compatibility

Unit: mm

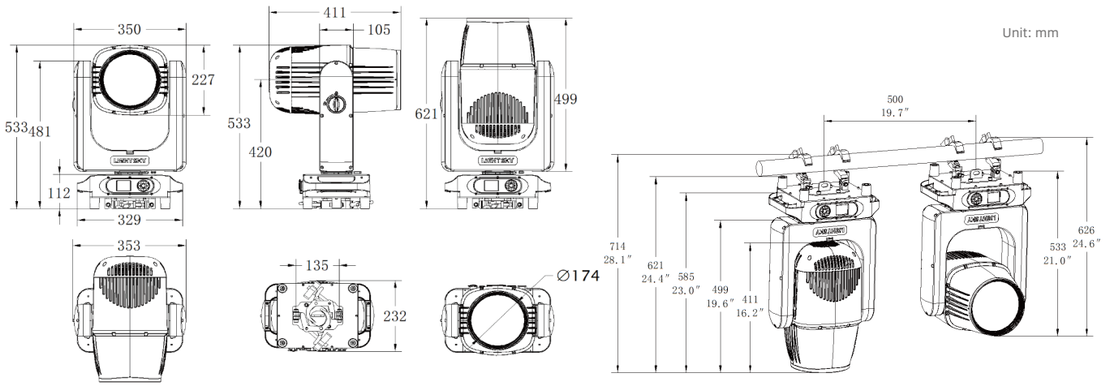



Light source & Optics

Light source: 300W white LED module
Beam Angle: 1.77°(ϕ6.5mm aperture)/1.3° (ϕ5mm aperture) /0.8° (ϕ3mm aperture)/0.5° (ϕ1.5mm aperture), switchable
Front Lens : High-transmittance coating, ϕ174mm
Colour Temperature Output: 7400K ± 250K
Color Rendering Index: Ra≥70
Illuminance: 60,000 lx @10m
Lumen Output: 3492 lm
Light Source Theory Life Span: 50,000 h

Color

CMY infinite color mixing
14 color filters + blank, Bidirectional color rainbow, dual-color gradient, color wheel rotation, random modes

GOBO

Fixed Gobo Wheel: 7 fixed gobos + blank
Rotation Gobo Wheel: 7 removable glass gobos
self-rotation/flow/jitter effects

Effects

Prism: 24-facet prism + 8-facet prism, bidirectional rotation
Frost effect: Light Frost
Dimming: 0-100% linear dimming with uniform spot
Strobe speed: 0.5-25 times/sec
LED refresh rate: 1000Hz~25KHz

Control and Programming

Control channels: 23CH (see channel chart for details)
Protocols: DMX512, RDM,sACN, Art-Net
Data connection: 3-pin or 5-pin, RJ45(Art-Net)in(optional: in/out)
Display: LCD screen

Software

Software upgrade via DMX signal
Intelligent temperature control for LED lifespan
Silent fan with three modes: High-brightness/Standard/Silent

Pan/Tilt Movement

Pan: 540°, 8-bit / 16-bit precision
Tilt : Infinite rotation
Automatic reset with error correction
Pan/Tilt Lock

Power and Electrical

Input Voltage Range: AC 100-240V 50/60Hz
Max Power Consumption: 562W
Power factor: 0.99
Max current: 2.55A/220V, 5.62A/100V

Size and Weight

Product Dimensions: 353mm x 232mm x 621mm
Net Weight: 22.0 kg
Carton Dimensions: 425mm x 305mm x 750mm
Gross Weight: 26.1 kg

Other

Protection level: IP66
Operating environment: -20℃~45℃
Max surface temperature: ≤60℃

Factory Configuration

Power Cable: 1 pc (Part No.: F0200030016)
Signal Cable: 1 pc (Part No.: F0200020008)
Safety Rope: 1 pc (Part No.: F0200010002)
Clamp: 1 set Lamp comes with collapsible hook(Part No.: C0499990051)

Optional Accessories/Packaging

Flycase Part No.: B0101250001
Flycase Dimensions(2 in 1): 650mm × 440mm × 830mm
Flycase Gross Weight(2 in 1): 77.4kg

Color Wheel

Function Effect

8 prism · 24 prism · Light Frost Effect · CMY

Rotation Gobo Wheel

Fixed Gobo Wheel

Illumination diagram

